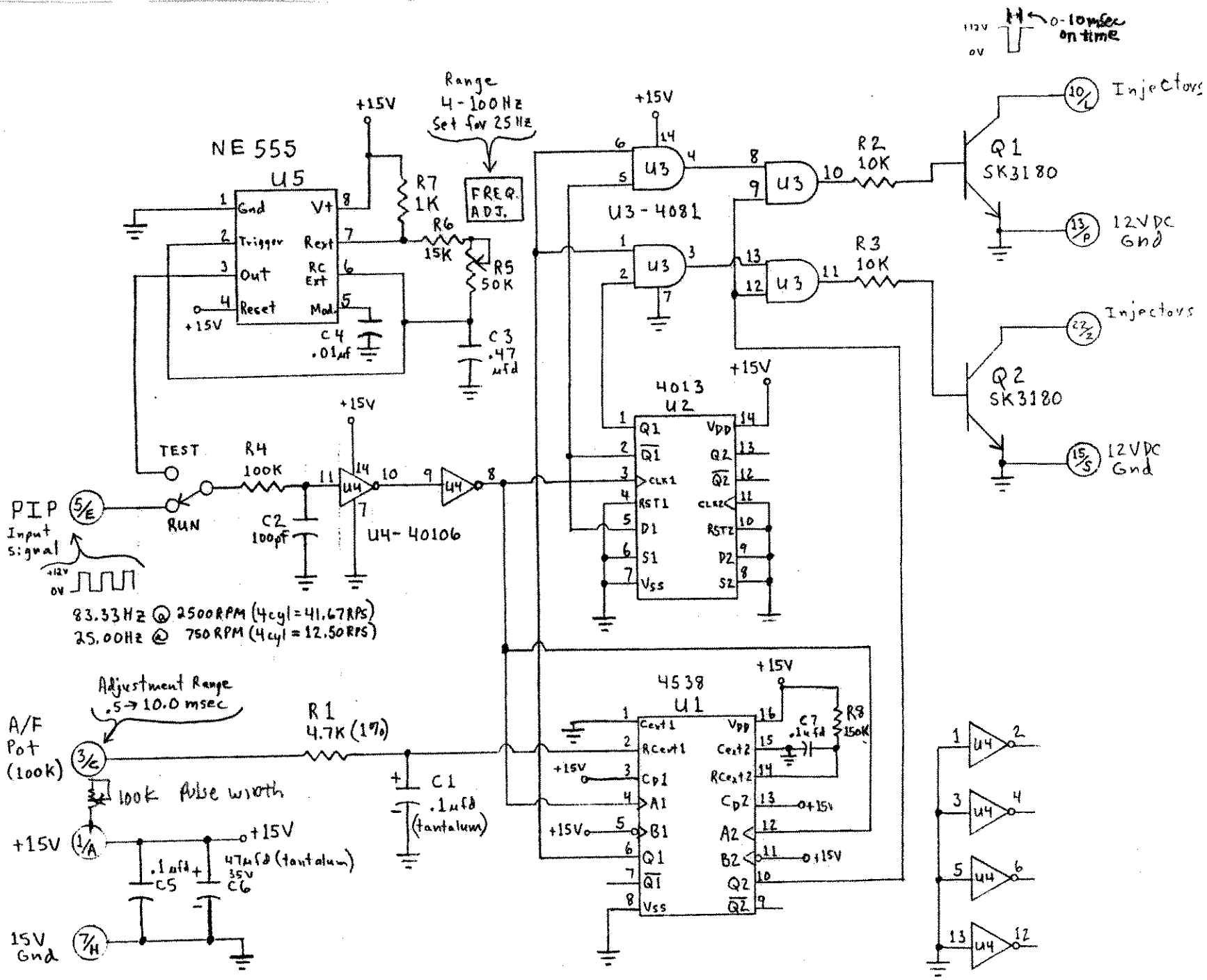
NE 555
U5
Gnd
Trigger
Out
Reset
V+
Rext
RC Ext
Mod.
+15V
R7 1K
R6 15K
R5 50K
C4 .01µf
C3 .47 µfd
Range 4-100Hz Set for 25Hz
FREQ. ADJ.
U3 - 4081
R2 10K
R3 10K
Q1 SK3180
Q2 SK3180
Injectors
12VDC Gnd
4013 U2
Q1
Q̄1
CLK1
RST1
D1
S1
Vss
VDD
Q2
Q̄2
CLK2
RST2
D2
S2
TEST
RUN
R4 100K
C2 100pF
U4- 40106
PIP Input signal
+12V
0V
83.33Hz @ 2500RPM (4cyl=41.67RPS)
25.00Hz @ 750RPM (4cyl=12.50RPS)
Adjustment Range .5→10.0 msec
A/F Pot (100K)
100K Pulse width
R1 4.7K (1%)
C1 .1µfd (tantalum)
.1µfd C5
47µfd (tantalum) 35V C6
15V Gnd
4538 U1
Cext1
RCext1
Cp1
A1
B1
Q1
Q̄1
Vss
VDD
Cext2
RCext2
Cp2
A2
B2
Q2
Q̄2
C7 .1µfd
R8 150K
0-10msec on time